PDF DATA SHEET

EFORCEAUSTRALIA PTY.LTD ACN:159 503 401

MIL-W-2096/1~3W

LD PUMPED ALL-SOLID-STATE INFRARED LASER

All solid state 2096nm infrared laser is made features of high power, good beam quality and easy operating, which is widely used in material processing especially for plastics, FSO communication, military and security applications and for pumping of laser sources for the mid infra-red region, medical procedures such as precise tissue ablation, ophthalmic surgery or dentistry, suppresses the bleeding during operations,etc.

SPECIFICATIONS

Wavelength (nm)	2096±2	
Output power (W)	>1, 2, 3	
Operating mode	CW	
Power stability (rms, over 4 hours)	<5%	
Warm-up time (minutes)	<10	
M^2 factor	<3	
Beam divergence, full angle (mrad)	<4	
Beam diameter at the aperture (mm)	<2	
Beam height from base plate (mm)	93.5	
Operating temperature (℃)	10~30	
Power supply (90-264VAC)	PSU-W-FDA	PSU-W-LED
Expected lifetime (hours)	10000	
Warranty period	1 year	

MxL-W-2096	PSU-W-LED	PSU-W-FDA
333(L)×140(W) ×125(H) mm³, 6.1 kg	**300 (L) ×162(W) ×134(H) mm³, 5.2 kg**	**307 (L) ×168(W) ×123(H) mm³, 5.1 kg**
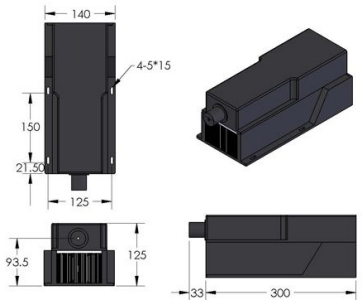	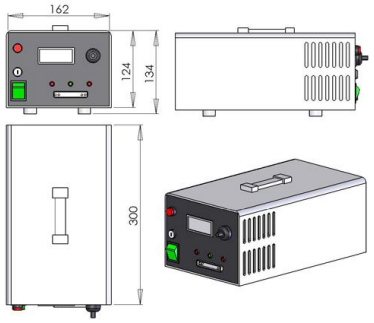	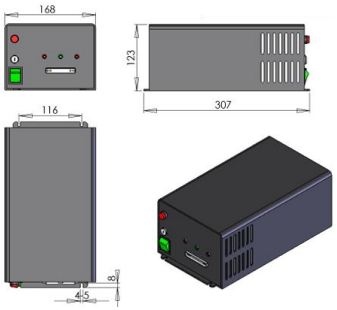

Website: http://www.eforcelaser.com.au E-mail: sales@eforcelaser.com.au Fax: 03-83954370